Metals Processing Simulation Laboratory
Department of Mechanical Science and Engineering
University of Illinois at Urbana-Champaign
Urbana, IL 61801

Validation of Heat Transfer Modeling in Slab Casting Molds Using CON1D

By

Lance C. Hibbeler and Brian G. Thomas

Continuous Casting Consortium

Report 200701

2007

Submitted to

Algoma Steel
Baosteel
Corus
Delavan Spray Technologies
LWB Refractories
Labein
Postech
Mittal Steel
Nucor Steel
Steel Dynamics

February 15, 2007

SUMMARY

The program CON1D can easily be calibrated based on the results of a three-dimensional finite element analysis, increasing the accuracy of the more simple calculation at no extra computational cost. This calibration is made by adjusting the depth of the simulated thermocouples in the mold by a small amount. This so-called “offset method” has been shown to be independent of heat flux, but any given mold geometry will have a unique offset value. This report details the procedure to determine the offset amount, using ABAQUS to compute the 3-D temperature field in the entire complex geometry of a real commercial continuous-casting mold narrow face. The results demonstrate the high accuracy of the calibrated CON1D model. This simple modeling tool can simulate heat transfer in a complete slice through the mold, interface and solidifying steel shell, including the prediction of mold hot face, cold face, and thermocouple temperatures with an accuracy that approximates the full 3-D calculation.

BACKGROUND

Researchers in the Metals Processing Simulation Laboratory at the University of Illinois have built and improved the FORTRAN code CON1D over the past twenty years [1]. The code models several aspects of the continuous casting process, including shell and mold temperatures, heat flux, interfacial microstructure and velocity, shrinkage estimates to predict taper, mold water temperature rise and convective heat transfer coefficient, interfacial friction, and many other phenomena. As indicated by the program name, the heat transfer calculations are one-dimensional in the thickness direction (but two-dimensional conduction calculations can be performed in the mold). Heat transfer in the mold is computed assuming a slab with attached rectangular blocks that form the rectangular cooling-water channels and act as heat transfer fins. Previous work by Langeneckert [2] has shown that CON1D can obtain the accuracy of a three-dimensional finite element model by adjusting the modeled depth of thermocouples in the mold. This work applies the same methodology to investigate the accuracy of CON1D in modeling a more complex mold geometry that features round cooling channels, a curved inner surface, round corners, bolt holes, water inlet channels, and other complexities. This analysis also includes the variations in convection and heat flux boundary conditions with distance down the mold. The entire mold geometry was modeled using the commercial finite element program ABAQUS 6.6-1, exploiting user subroutines to include the boundary condition variations.

CON1D MODEL

The process parameters used in this analysis are typical values used with the narrow face of the Corus thin-slab caster in Ijmuiden, Netherlands. Some key parameters include a casting speed of 4.5 m/min, pour temperature of 1545 ºC, meniscus level of 100 mm below mold entrance, casting a 0.045%C steel. To create the one-dimensional rectangular representation of the mold geometry in CON1D, the narrow face cross-section was transformed as shown in Figure 1. The curvature of the hot face has been exaggerated for detail; the fillet radius of the corners is 0.8 mm.

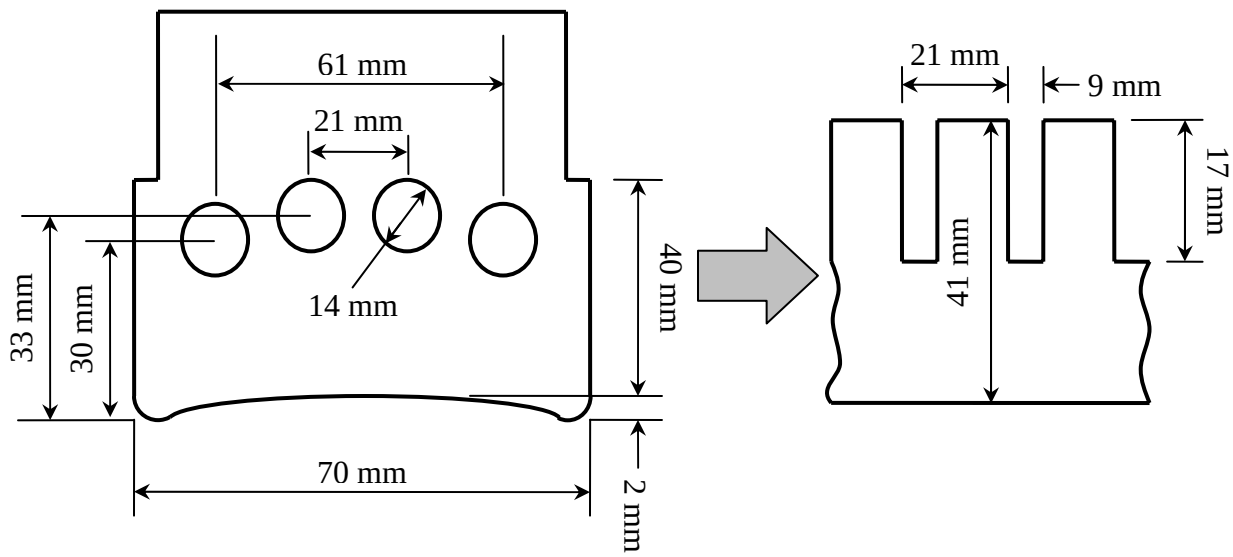

Figure 1. One-Dimensionalization of Mold Geometry

To approximate the actual geometry, the shortest distance between the water channels and the hot face was maintained at 24 mm, and the pitch between the channels similarly was set to 21 mm. To match the water flow rate, the dimensions of the rectangular channels were chosen to keep the cross-sectional area about the same as that of the actual 14 mm diameter channels. In addition, to maintain heat transfer characteristics, the channel width was chosen to be about two-thirds of the diameter of the actual round channel. These two considerations yield a 9 mm by 17 mm channel and a 41 mm thick mould. CON1D aims only to model a typical section through the mould, and cannot predict variations in the direction around the mould perimeter, such as corner effects.

THREE-DIMENSIONAL MODEL FOR OFFSET CALCULATION

Two different three-dimensional heat transfer models were developed of the continuous casting mold with ABAQUS 6.6-1. The first was a small, symmetric section of the mold geometry containing one quarter of a single thermocouple, which was used to determine the offset for CON1D. The second was a complete model of one symmetric half of the entire mold piece, used to determine an accurate temperature distribution including the effects of all geometric features, and to evaluate the CON1D model. To properly compare the results of the simple finite-element model with CON1D, simple conditions were chosen to exactly match the CON1D input parameters. Figure 2 highlights the location of this "calibration section" in the entire mold piece, and Figure 3 shows the geometry and boundary conditions of the finite element model. The applied heat flux Q to the hot face is constant and uniform, as are the thermal conductivity k of the mold and the convective heat transfer coefficient h and sink temperature T_∞ applied to the water channel surfaces. All unlabeled surfaces in the figure are modeled as perfectly insulated.

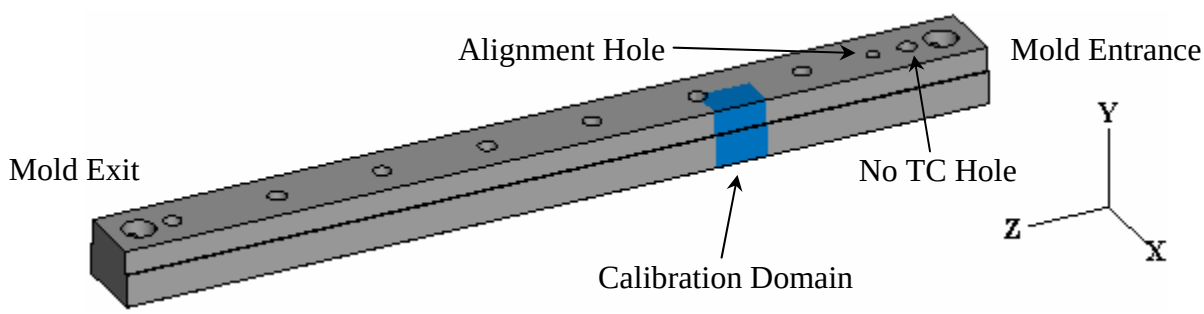

Figure 2. Location of Calibration Domain

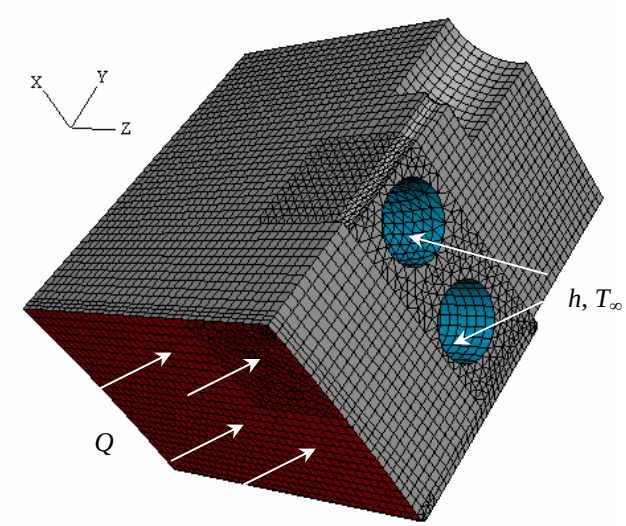

Parameter	Value	Units
Q	2.6	MW/m^2
h	40.0	$kW/m^2 \cdot K$
T_∞	36.0	ºC
k	350.0	W/m·K

Figure 3. Narrow Face Boundary Conditions

This finite-element mesh used 45840 mixed (hexahedrons, tetrahedrons, and wedges) quadratic elements, giving 152891 degrees of freedom. The solution took 80 seconds (wall clock) on a 2.0 GHz Intel Core2 Duo PC. Figure 4 shows the resulting contour plot and identifies the point in the model associated with the thermocouple temperature as well as the face from which further data was extracted. The maximum temperature of 296 ºC is found on the hot face corner, and is about 20.5 ºC hotter than the hot face centerline.

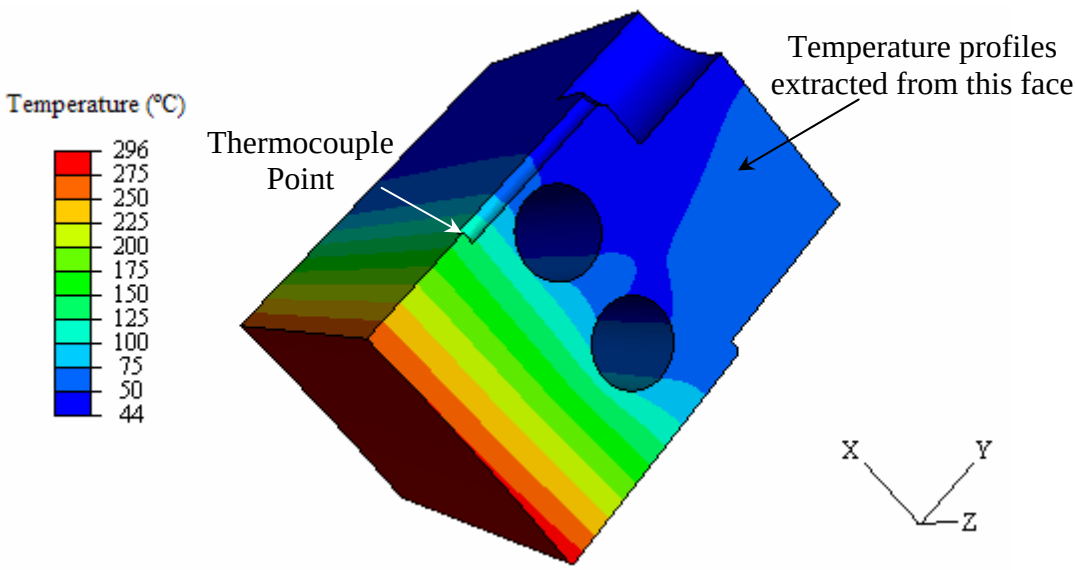

Figure 4. Narrow Face Calibration Results

The temperature profiles along four paths are shown in Figure 5, in which a linear temperature gradient is evident between the hot face and the water channels. The temperature variation between these paths is small, with only 2 ºC difference across the hot face in the vicinity of the paths. The lowest temperature is found on the back (cold face side) of the water channel (Path 3). The missing copper around the thermocouple causes the local temperature to rise about 10 ºC, however. These localized effects are of marked interest, and the path through this point will be used to determine the offset in CON1D.

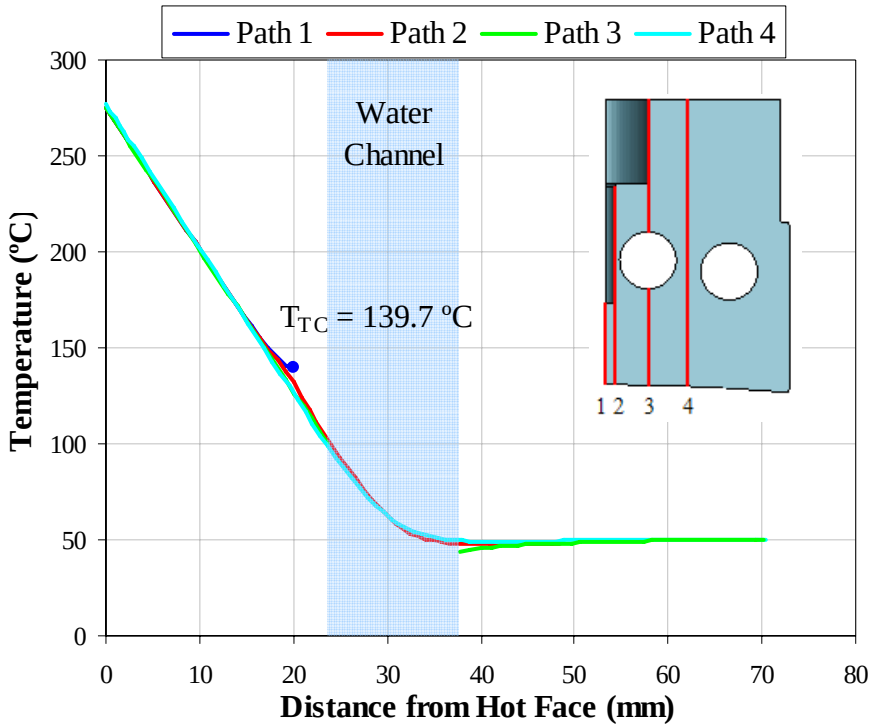

Figure 5. Temperature Profiles in Narrow Face

DETERMINATION OF OFFSET

In running CON1D, several thermocouples were set at varying depths into the mold at the calibration point (249 mm below the meniscus). Figure 6 shows the resulting temperature distribution was compared with the Path 1 results from Figure 5. Although CON1D is unable to capture the localized effects of the complex geometric features, the ABAQUS thermocouple temperature can be found in the CON1D mold at a position closer to the hot face. By "moving" the thermocouple to this new location by a small "offset distance," accurate thermocouple temperatures can be predicted using CON1D. The value of the offset distance is determined easily using the CON1D temperature profile as follows:

$$d_{offset} = (T_{TC} - T_{hf})\frac{dx}{dT} - d_{TC} = (139.7 - 273.16)°\text{C} \cdot \frac{30\,\text{mm}}{(50.21 - 273.16)°\text{C}} - 20\,\text{mm} = 2.05\,\text{mm}$$

Where d_{offset} is the offset distance (mm)

T_{TC} is thermocouple temperature from ABAQUS (ºC)

T_{hf} is the thermocouple temperature from CON1D (ºC)

dx/dT is the inverse of the temperature gradient from CON1D (mm/ºC)

d_{TC} is the actual depth of the thermocouple from the hot face (mm)

Figure 6 also shows that CON1D is able to match the 3D results for about twelve millimeters into the mould, or two-thirds of the distance from the hot face to the thermocouple. This is generally the case throughout the mold, except where the three-dimensional effects are greatest, such as near the peak heat flux.

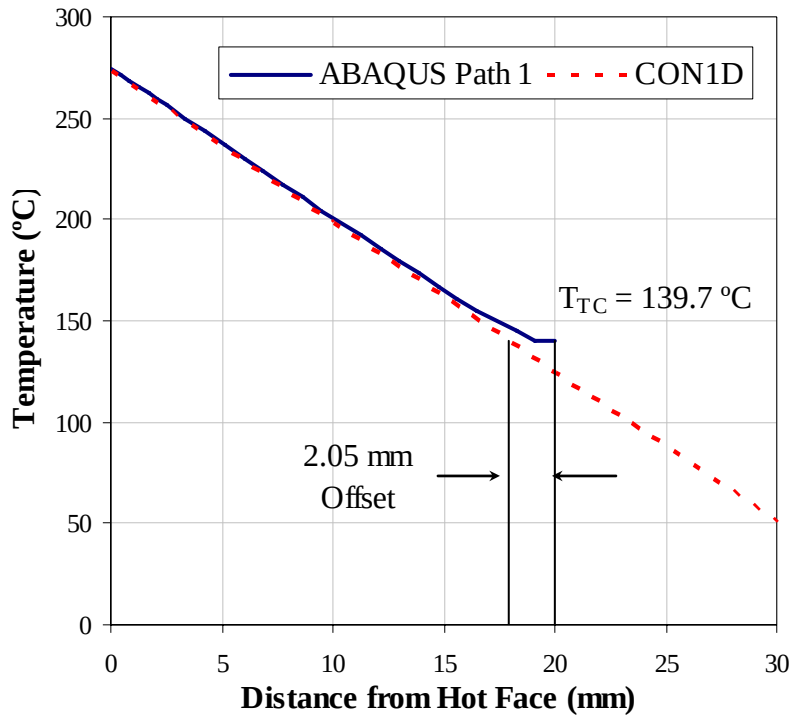

Figure 6. Determination of Offset

VERIFICATION OF OFFSET

Having calibrated the CON1D model by determining the offset distance, both the full three-dimensional model and CON1D simulation were run using realistic boundary conditions for the mold. One symmetric half of the entire three-dimensional narrow face geometry (minus chamfers and other small geometries away from areas of interest) was analyzed next in ABAQUS, using the DFLUX and FILM user subroutines to apply a spatially varying heat flux and convective sink temperature, respectively, to the model. The output of CON1D specified the values of these quantities at 25 points along the mold (plots shown in Figure 7), and ABAQUS linearly interpolated as necessary. The convective heat transfer coefficient was maintained at 40 $kW/m^2 \cdot K$ since the hydraulic diameter of the water channels was not maintained in the geometry

transformation (CON1D calculates the value of the coefficient using the Sleicher and Rouse correlation, which depends on hydraulic diameter). This ABAQUS model used 468583 quadratic tetrahedron elements, giving 683812 degrees of freedom, and required 7.1 minutes (wall clock) to analyze.

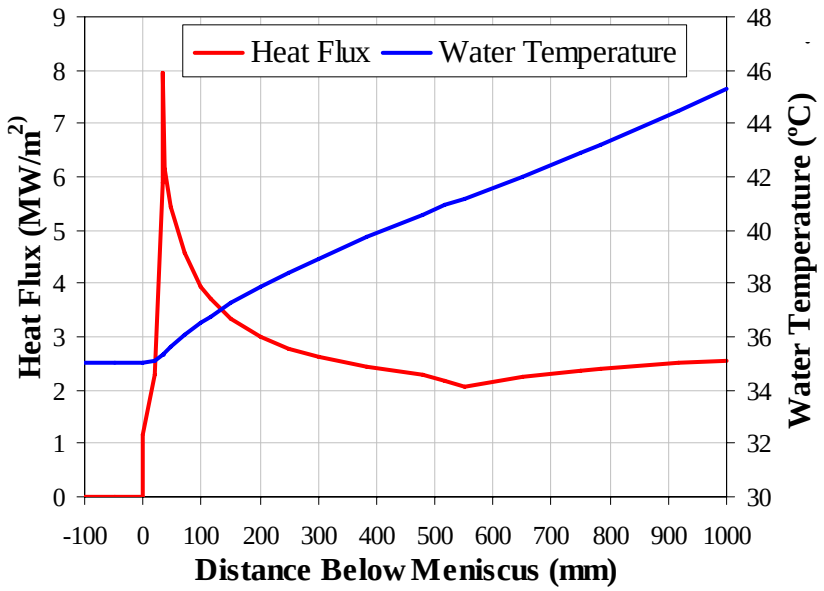

Figure 7. Heat Flux and Water Temperature Profiles from CON1D

Figure 8 shows the temperature contours from the three-dimensional model of the entire mold narrow face. Localized three-dimensional effects near the peak heat flux and at mold bottom are obvious. The cooler spot around the center of the hot face corresponds to an inflection point in the imposed heat flux curve. The highest temperatures occur at the small filleted corners of the mold at the peak heat flux due to their distance from the water channels. Figure 9 shows the hot face temperatures extracted from the ABAQUS model along the plane of symmetry compared with the hot face temperatures from CON1D. The two models match very well except around the areas with strong three-dimensional effects.

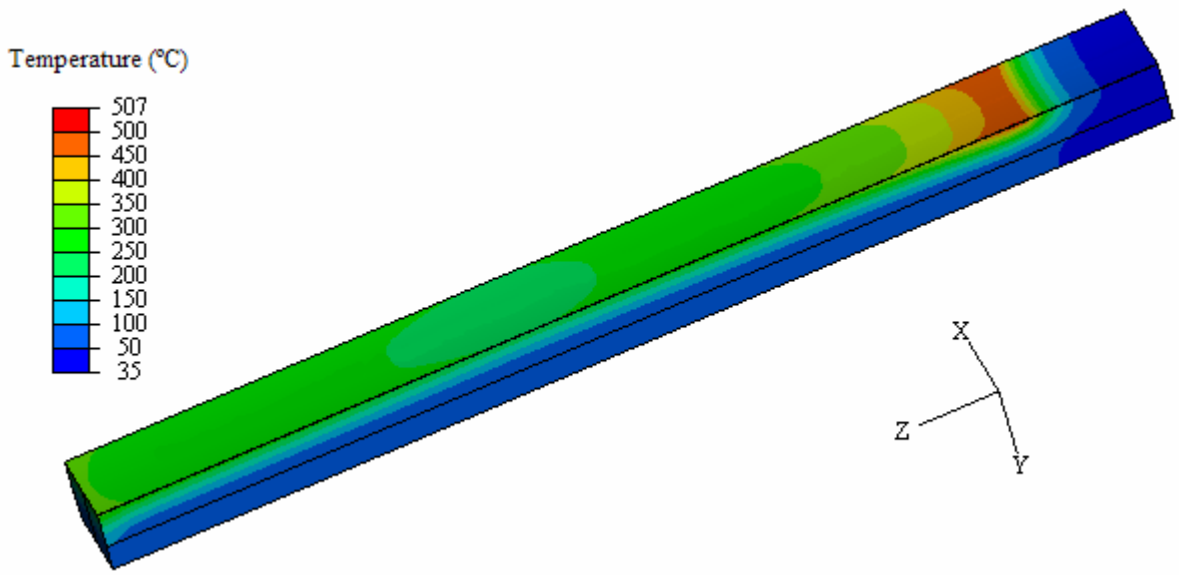

Figure 8. Full Three-Dimensional Model Temperature Results (°C)

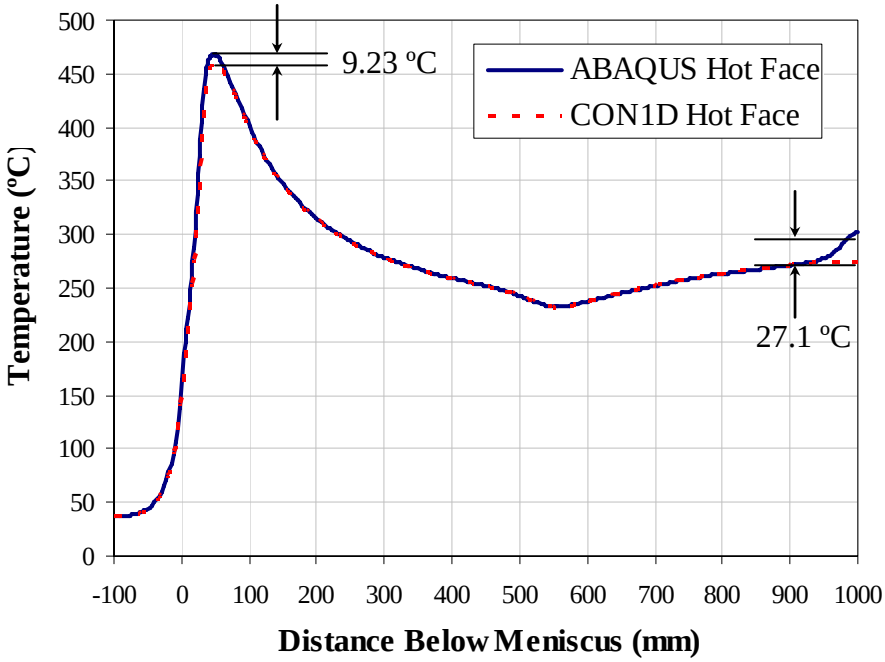

Figure 9. Hot Face Temperatures Comparison

Figure 10 shows the temperature contours around the area of peak heat, highlighting the localized thermal effects. Although the CON1D model is least accurate at the hot face at this location, its two-dimensional mould temperature calculation in the vertical slice allows it to achieve acceptable accuracy.

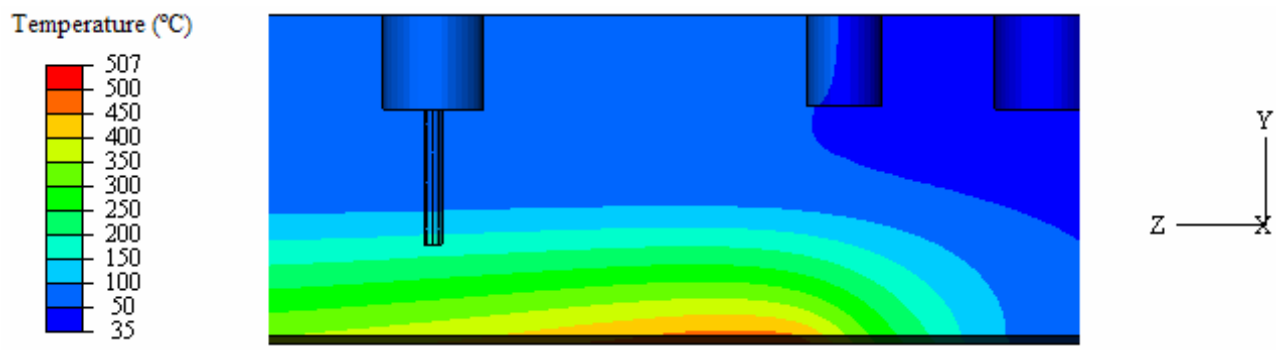

Figure 10. Temperature Contours Around the Peak Heat Flux (°C)

The temperatures predicted at all of the seven possible thermocouple locations in the mold were compared with the offset CON1D values. The topmost of the eight bolt holes does not have a thermocouple port, and the middle hole in Figure 10 is for alignment. The results are tabulated in Table 1 and illustrated in Figure 11. The temperatures match almost exactly (within 1.4 °C), which is within the finite-element discretization error. This is a great improvement over the 12 to 21 °C error produced by CON1D without the offset. Figure 11 also shows that the CON1D offset method is independent of heat flux, since the same offset was applied to all thermocouples. This means that a given mold geometry needs to be modeled in 3-D only once prior to conducting parametric studies using CON1D. In addition to its increased speed and ease-of-use, the CON1D model includes powerful additional calculations of the interfacial gap and solidifying shell. Thus, calibrating the CON1D model using the offset method to incorporate the 3-D ABAQUS results, unleashes a powerful and accurate tool to study continuous casting phenomena.

CON1D faces the highest challenge with strong three-dimensional effects, so to investigate the robustness of the method, the CON1D simulation was rerun with the meniscus level shifted downward by 80 mm so that the peak heat flux coincides with the first thermocouple point, and all other parameters the same. As before, the output of CON1D specified the heat flux and water temperature conditions for the ABAQUS model. The results of this simulation are illustrated in Figure 12 and tabulated in Table 2. The error in the CON1D temperature prediction for the thermocouple at the peak heat flux is only -3.4 °C, which is still a reasonably good result.

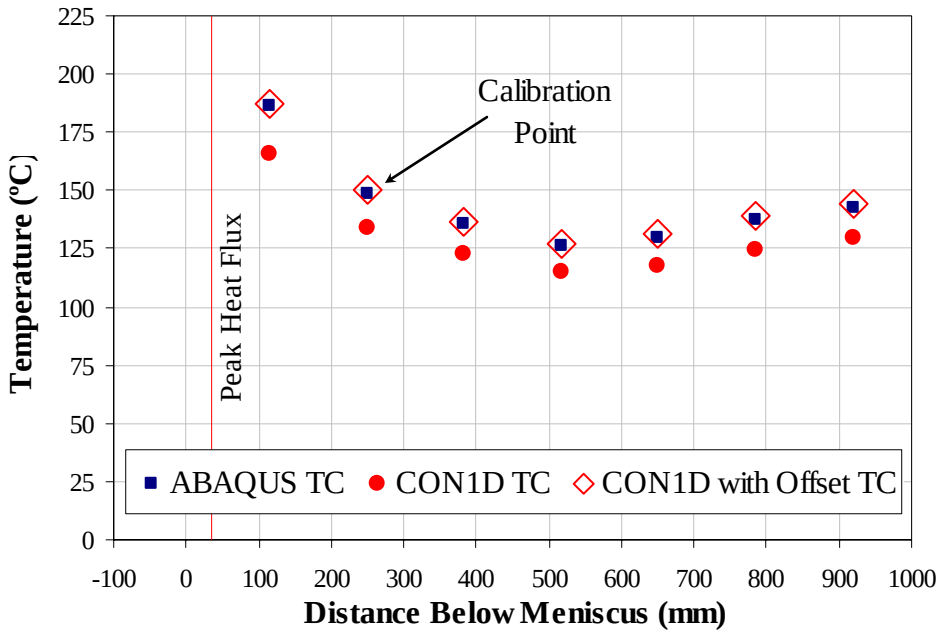

Figure 11. CON1D Offset-ABAQUS Comparison

Table 1. Results of Offset Method

Distance Below Meniscus	ABAQUS	CON1D		CON1D with Offset	
	Temperature	Temperature	Difference	Temperature	Difference
mm	ºC	ºC	ºC	ºC	ºC
115	186.6	165.4	-21.2	187.5	0.9
249	148.9	133.6	-15.3	150.0	1.1
383	135.7	122.5	-13.2	136.7	1.0
517	126.3	114.7	-11.6	127.4	1.1
651	129.8	118.0	-11.8	131.1	1.3
785	137.6	124.9	-12.7	139.0	1.4
919	142.9	129.6	-13.2	144.3	1.4

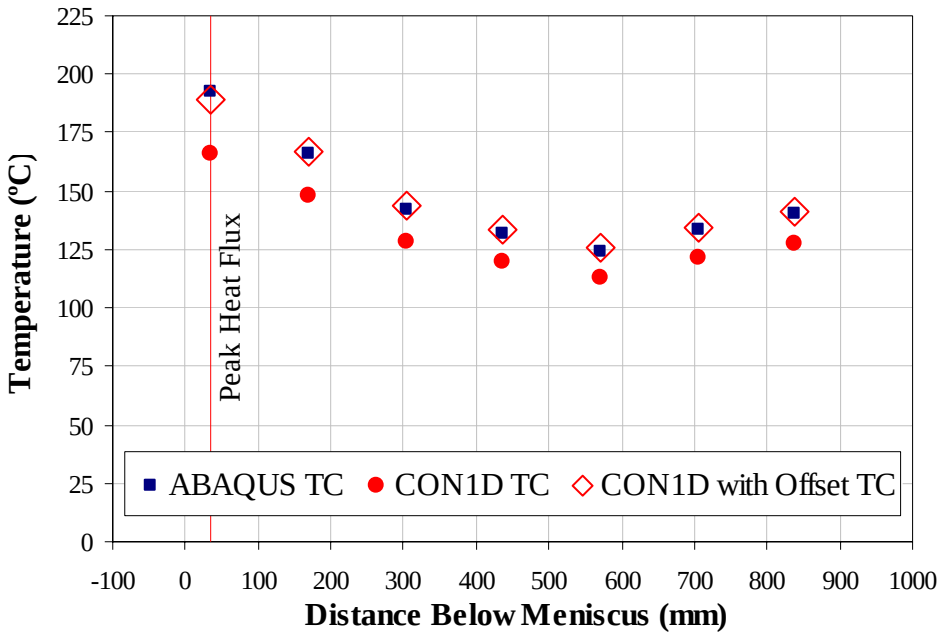

Figure 12. CON1D Offset-ABAQUS Comparison With Lower Meniscus

Table 2. Results of Offset Method With Lower Meniscus

Distance Below Meniscus	ABAQUS	CON1D		CON1D with Offset	
	Temperature	Temperature	Difference	Temperature	Difference
mm	ºC	ºC	ºC	ºC	ºC
35	192.4	165.8	-26.6	188.9	-3.4
169	165.7	147.7	-18.0	166.6	0.9
303	142.3	128.0	-14.3	143.3	1.0
437	132.1	119.8	-12.3	133.5	1.4
571	124.2	113.1	-11.1	125.4	1.2
705	133.3	121.1	-12.2	134.7	1.3
839	140.0	127.1	-13.0	141.4	1.4

SUMMARY OF THE OFFSET METHOD

Determining and applying the offset method requires only a few simple steps. This process need only needs be performed once for any given mold geometry.

1. Analyze a three-dimensional model of a typical symmetric section of the casting mold in a finite-element software package. Apply a constant, uniform heat flux to the hot face and a convective boundary condition to the water channels. Make a note of the thermocouple temperature for later use.
2. Transform the geometry in CON1D and match the finite element boundary conditions:
   a. Set the value of the heat flux to the same value for several points in the mold around the calibration point (simulation parameters section of the input file).
   b. Set the value of the heat transfer coefficient (mold water properties section).
   c. Set the value of the mold thermal conductivity (mold geometry section).
   d. The value of the cooling water temperature at mold top (mold geometry section) must be iteratively changed so that the water temperature in the CON1D model at the elevation of the calibration point (values output in the .mld file) matches the finite element model boundary condition.
3. Set a number of thermocouples through the depth (including on the hot face) of the simulated mold in CON1D, all at the appropriate distance below the meniscus. Based on the simulation results (found in the .ext file), calculate the temperature gradient and compute the value of the offset distance as detailed above in this document.
4. Appropriately adjust the depth of the thermocouples for the next simulation, and enjoy the benefits of a 3D finite element calculation in CON1D.

CONCLUSION

The accuracy of a three-dimensional analysis can be imparted to the simulated thermocouple temperatures in CON1D by applying a small offset to the modeled depth of the thermocouples in the mold. The method has been shown to work very well, increasing the accuracy of the predicted temperatures to within about 1 ºC, and only slightly worse around areas with strong three-dimensional effects. The CON1D model is also able to predict the hot face temperature of the mold wall quite accurately, even for mold geometries with round slots that are very different from the rectangular-slot geometry assumed.

REFERENCES

1. Meng, Y. and B.G. Thomas, *Heat Transfer and Solidification Model of Continuous Slab Casting: CON1D.* Metal. & Material Trans., 2003. **34B**(5): p. 685-705.

2. Langeneckert, Melody, "Influence of Mold Geometry on Heat Transfer, Thermocouple and Mold Temperatures in the Continuous Casting of Steel Slabs." M.S. Thesis, University of Illinois at Urbana-Champaign, 2001.